shown with 12"x12" flange

Protection from Above

Helo F1

UV DISINFECTING FIXTURE

The Helo F1 disinfects a whole room, delivering protection from above. The unit can be ordered for installation in a drop-in grid ceiling, recessed in a hard ceiling, surface or wall mounted, or used as a portable, table top unit. It emits broad spectrum UV light to eliminate up to 99.9% of the bacteria, viruses, and fungi in a space[1]. In rooms that have been cleaned of mold, the unit will help control return growth if used routinely[2].

The unit can be ordered for manual commissioning or integration into the facility Building Automation System (BAS). Manual commissioning can be done with the assistance of a local rep using a Setup Wizard. Units integrated into BACnet are programmed through the BAS dashboard.

Ceiling or wall mounted installation to disinfect a whole room without staff requirements to relocate it.

Broad Spectrum UV-C, UV-B and UV-A light to kill bacteria and viruses.

Programmed manually or integrated into building automation systems through BACnet.

One UV Light Engine with pulsed Xenon lamp for a 10' x 10' ft coverage area.

1. Study Report August 2017, "Antimicrobial Effectiveness of Puro Device", using modified ASTM International Standard Test Method E1153.
2. Research Journal of Microbiology, 2 (1), 42-49, 2007; Mycological Research, Vol. 92, Issue 3, 1989

PROJECT	CONTACT	ORDERING SKU
REFERENCE NO.	QUANTITY	DATE

PURO Helo F1

Product Specifications

Illumination

Light Source	Proprietary Pulsed Xenon Lamp
Flash Interval	1 UV Flash every 6 seconds
Wavelengths	UV-C (200-280nm) Germicidal UV-B (280-320nm) Germicidal UV-A (320-400nm) Antibacterial
Range	10' x 10' typical (100 sq feet)
UV Bulb Rated	> 2 Million UV Flashes [2]

Electrical System

Input Voltage	110V AC
Max Current	3.5 Amps
Total Power	25W per standard, 30 minute cycle
Power Connection	3-prong grounded plug

Physical

Weight	F1 2.6 lbs F1-12 4lbs F1-24 6.5 lbs
Housing/Finish	Brushed Aluminum
Optics	One patented UV Light Engine with transmissive UV lens and pulsed Xenon UV lamp
Beam Angle	170º

Environment

Ambient Operating Temperature	41ºF to 104ºF
Ambient Operating Humidity	<80%RH non-condensing

Certifications and Qualifications

Safety	TUV Certified, tested to UL 61010-1:2012
FCC	Compliant with Part 15 Class A
RoHS	Compliant
FDA	Materials are cleared for use in food and medical areas
EPA	Registered

Warranty

Warranty	1 year

CAUTION

CAUTION - IF THE FIXTURE EXHIBITS UNDESIRABLE OPERATION (BUZZING,FLICKERING, OR IF THE UNIT'S LED STATUS INDICATOR IS FLASHING RED), IMMEDIATELY TURN OFF POWER AND CONTACT MANUFACTURER.

INDOOR USE ONLY.

* IMPORTANT ORDERING NOTE

THIS UNIT MUST BE ORDERED FOR INTEGRATION INTO A BUILDING AUTOMATION SYSTEM VIA BACNET OR FOR MANUAL COMMISSIONING. UNITS ARE NOT INTERCHANGEABLE.

MADE IN USA

Notes

1 Disinfection is a function of device run time and the distance to the UV light source.

2 Operating Life is dependent on frequency and duration of disinfection cycles.

Cycle	Time	Aprox. Bulb Life
Standard	30 min/day	18.3 years
Deep	1 hr/day	9.1 years
Terminal	2 hr/day	4.6 years

Certifications

This device is TUV Certified, tested to UL 61010-1:2012 specifications.

Tested to be compliant with FCC Part 15 Class A.

Internal components of this device are UL Listed or UL Recognized.

The manufacturer is registered with the US Environmental Protection Agency (EPA). Clinical laboratory testing has been performed at independent labs.

Control Options

Controlled though BACnet
The unit can be switched on/off through the facility BACnet. Programming is done through the Building Automation Software system dashboard.

Manually Controlled
The unit can be manually switched on/off for a single default or commissioned cycle through a switched or a remote-controlled outlet. Commissioning is done at the device using an Ethernet port and a simple setup wizard.

Safety and Occupancy Sensors
The redundant safety systems ensure the unit will not activate while the room is occupied and will immediately suspend operations if motion is detected in a previously unoccupied room. If interrupted, the unit will resume its programmed cleaning cycle once motion is no longer detected.

Operational Modes

The unit can be ordered to operate in either a BACnet integrated mode or a manually commissioned mode. The modes are configured at the factory and cannot be changed on the device.

BACnet Integration Mode
Disinfection-on-Demand operation is programmed through the Building Automation Software (BAS) with the Helo F1 through BACnet.

The cycle time, cycle repeat, cycle schedule and motion sensor settings and unit on/off and initial activation are controlled through the system dashboard.

Devices ordered with the BACnet Integration Mode must be initially activated through the BAS software to operate.

NOTE: By default, this mode will have safety features DEACTIVATED.

Manually Commissioned Mode
The Helo F1 units can be manually commissioned by a local Puro representative. Commissioning for Disinfection-on-Demand includes cycle time, cycle repeat and cycle schedule settings.

Devices ordered with the Commissioned Mode must be setup before they will operate.

Installation

Wiring

All units ship with a 6 foot cord terminated with a grounded 110V plug.

110V Outlet
The unit can be plugged into a non-GFI 110V outlet. If an outlet is not accessible near the fixture location, you may require a licensed electrician to install an outlet.

Switched 110V Outlet
The non-GFI 110V outlet may be a switched outlet for convenience, especially in manually commissioned and controlled units. If a switch is not available, you may require a licensed electrician to install the switch.

Wi-Fi Smart Outlet
The unit may also be plugged into a Wi-Fi or Bluetooth controlled smart outlet, eliminating the need to install a switch and using instead a smartphone based application to turn the unit on/off through the smart outlet.

Mounting

Drop-in Ceilings
The Helo F1-24 with it's 24"x24" flange kit is simply dropped into a 24"x24" or 24"x48" drop-in ceiling.

Recessed Hard Ceilings
The Helo F1-12 has an integrated 12"x12" flange enabling it to be placed in a hard ceiling recessed opening.

Wall Mount, Surface Mount or Portable/Table Top Use
The Helo F1 has attach points for a 100mmx100mm VESA mount for wall or surface mounting. The unit can also be used as a portable or table top unit.

Dimensions

Helo F1 (no flange)
Dimensions: 8.60” x 5.60” x 2.90”
Installation: Wall Mount, Surface Mount or Portable / Table Top Use

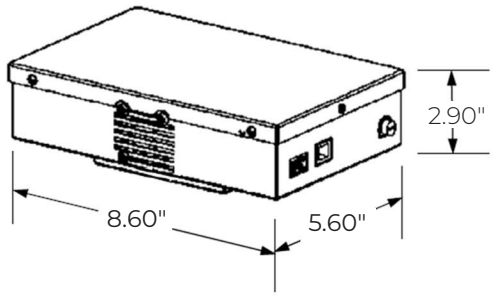

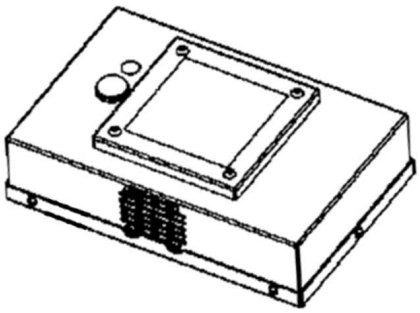

Helo F1 -12 (12"x12" flange)
Dimensions: 12.75" x 12.75" x 2.49"
Installation: Recessed in Hard Ceiling

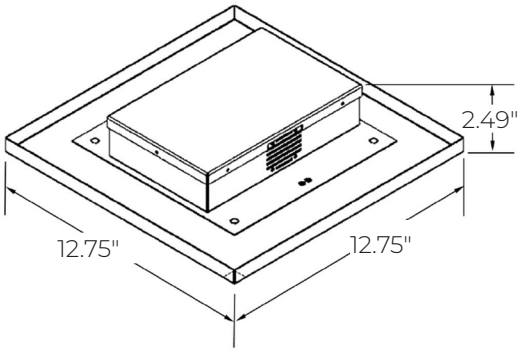

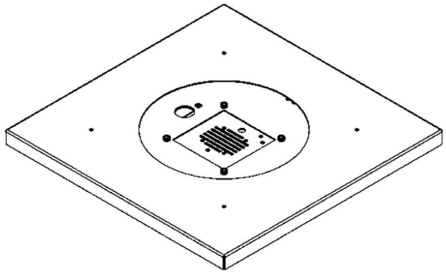

Helo F1 -24 (24"x24" flange)
Dimensions: 23.80" x 23.80" x 3.00"
Installation: Drop-in Grid Ceiling

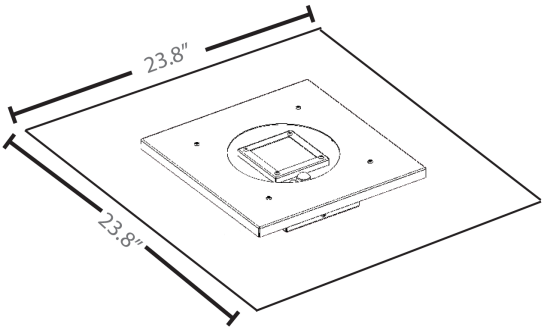

Ordering Information

Example: H-F1-24-6-P-COM-110

FAMILY	MODEL	CORD LENGTH	CORD TERMINATION	CONTROLS	WATTAGE
H = Helo	**F1** = Fixture unit with one UV Light Engine **F1-12** = Fixture unit with one UV Light Engine and 12"x12" flange **F1-24** = Fixture unit with one UV Light Engine and 24"X24" flange kit	**6** = 6 feet	**P** = Three-prong grounded plug	**COM** = Manually Commissioned	**110** = 110V AC

© Copyright 2020 Puro. All Rights Reserved. Puro, the Puro logo, Helo and Sentry are trademarks of Puro. All other trademarks are the property of their respective owners. Specifications are subject to change without notice. This document is for informational purposes only.

PURO™
UV Disinfection Lighting